Parts List				
Item	Qty	Part Number	Material	Mass
1	1	0665597-Autel Maxicharger DH480-Adapterplatta 750x750 Autel-2	Steel	15020.223 g

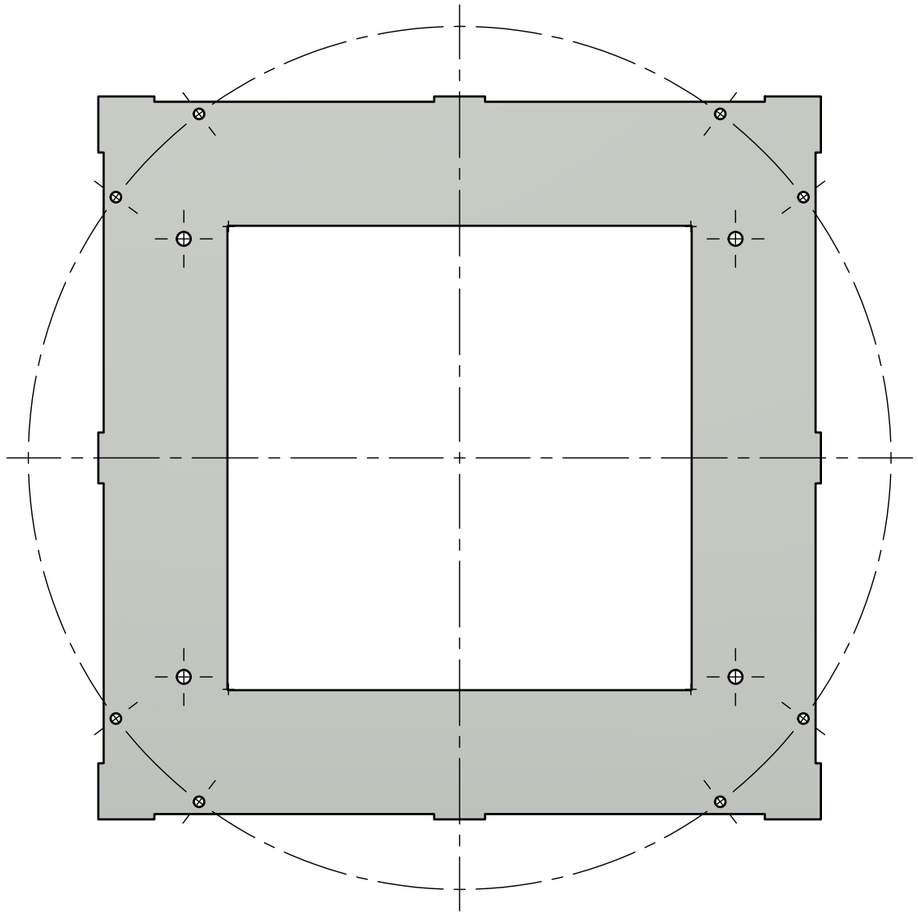

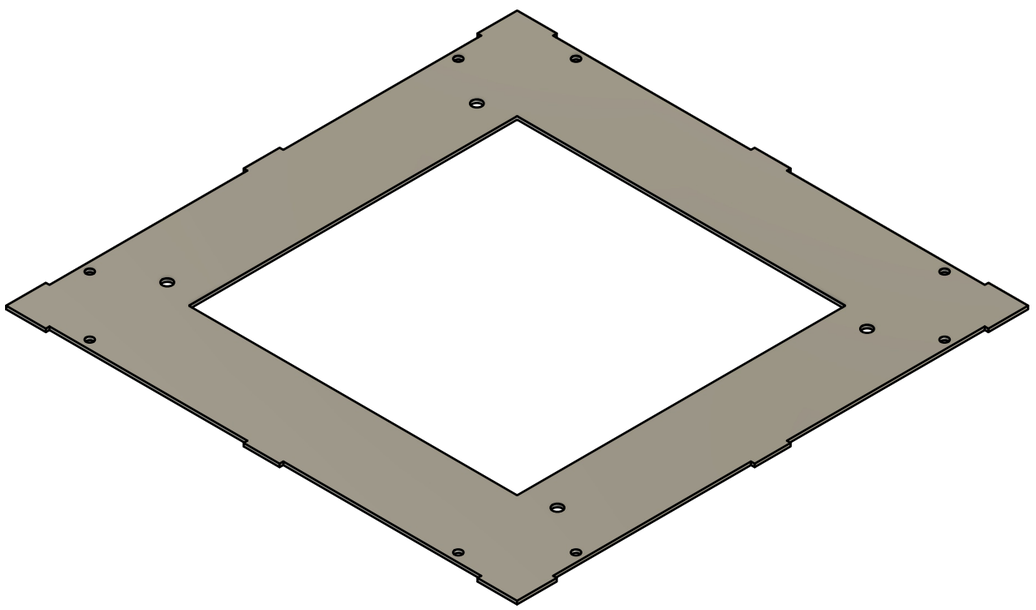

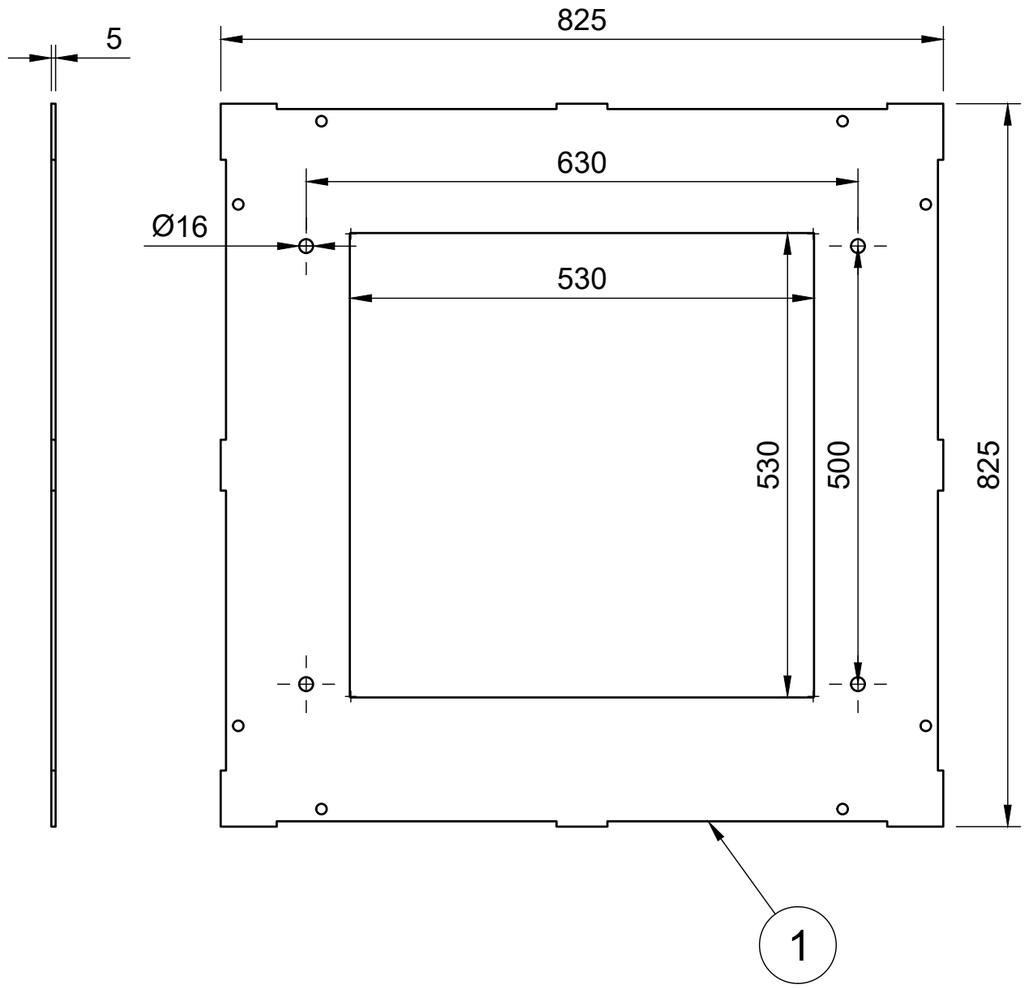

Dept. 200	Technical reference:	Created by: Simon Gullberg	Approved by: Melbye Group
Material:	Mild Steel	Document type: PDF	Created Date: 2025-10-06
Finish:	Galv.EN1461	Part Name: 0665597-Autel Maxicharger DH480	Date of issue: / Sheet: 1/1