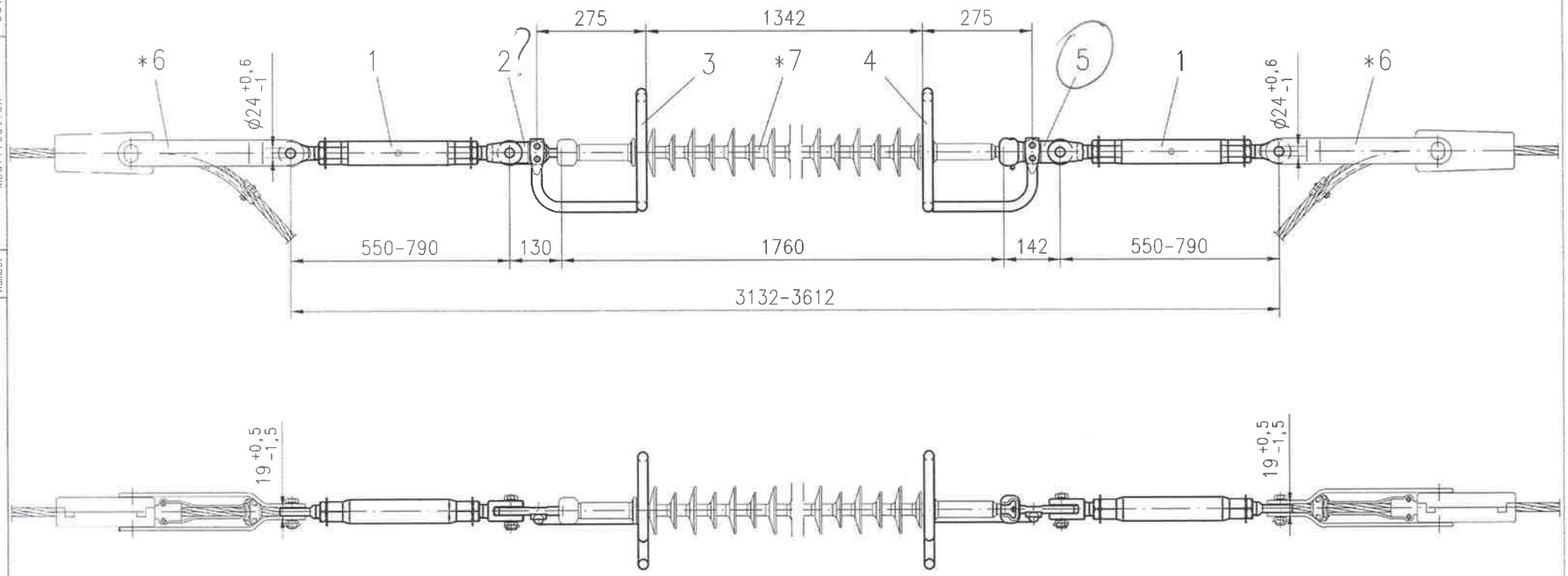

* (Insulator, Wedge type tension clamp will be ordered seperately)

Itm	Qty	Description	Standard	Drg. no.	Art. no.	Material	Surface	Mass [kg]
*7	1	Insulator	IEC 20					
*6	2	Wedge type tension clamp						
5	1	Socket eye straight	IEC 20	F0308005	4220.21/2/S			
4	1	Lower arcing ring		F0711646/1	4760.42/1/2			
3	1	Upper arcing ring		F0711392/1	4760.42/1			
2	1	Ball eye straight	IEC 20	F0303014	4213.02/2/S			
1	2	Turnbuckle M33		F0315146	4268.05/4/1			

2014	Date	Name	MOSDORFER KNILL GRUPPE	Replace for	Sim. to drg.-no.
Drawn	03.06.	Grimm		Replaced by	TS11E0103
Checked	03.06.	Schinnerl		Art. No.	TS11E0107

Title: 145 kV Transposition Set

Drg. No.: TS11E0109

Rev. | Mod. | A3

Scale: NTS

No. of pages | Page

Tolerance acc. to: ---- | Short circuit current: 40 kA 1s | Breaking load: 210 kN | Mass: ---- kg

Letter | Revision | Date | Name | Number | Modification | Date | Name

This page and its indications is intellectual property of Mosdorfer Company and it is not allowed to forward those information to a third party without the written assent of Mosdorfer company