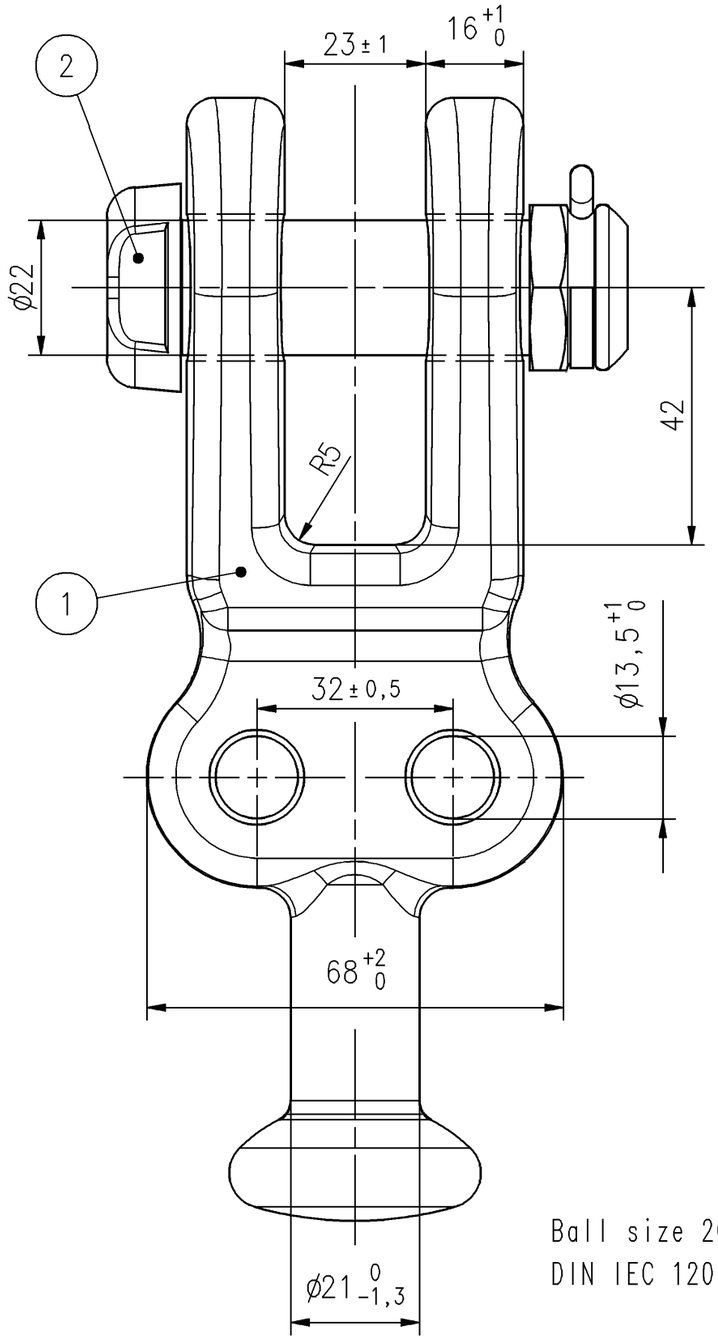

Ball size 20
DIN IEC 120

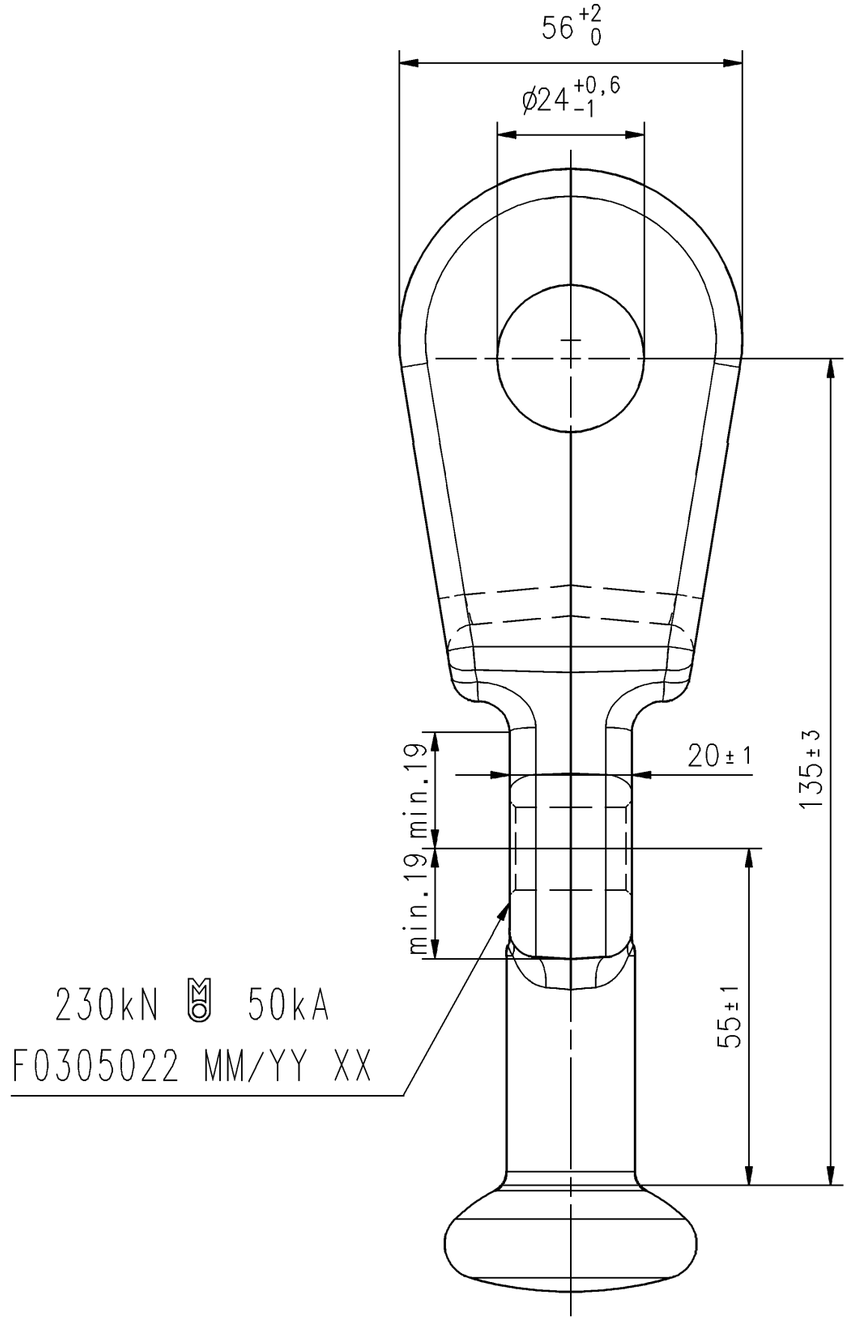

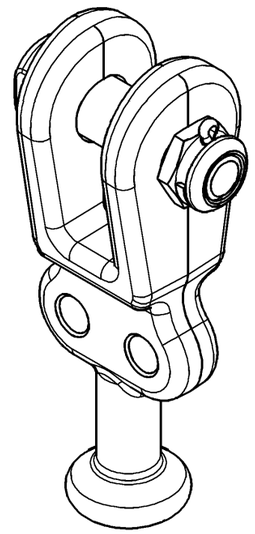

Letter	Revision	Date	Drawn	Chkd.
b	Drg. updated	05.06.2014	JaKi	ReHl
a	Supplier code added	21.12.2010	MarGru	

This page and its indications is intellectual property of Mosdorfer Company and it isn't allowed to forward those information to a third party without the written assent of Mosdorfer company.

Itm	Qty	Description	Standard	Drg.no.	Art.no.	Material	Surface	Mass (kg)
2	1	Bolt S22x57	DIN 48073		1046.31/0	8.8	hot dip galv.	
1	1	Ball clevis IEC 20	IEC 120			C 45 E + QT	hot dip galv.	

	Date	Name
Drawn	10.07.2003	Grimm
Chkd.	10.07.2003	Zechner

MOSDORFER KNILL GRUPPE

Replace for	Sim. drg.-no.
Replaced by	F0305021
Art. No. 4217.33/1	

Scale 1:1

Title: Ball clevis twisted
IEC 20,S22

Type | Drg. No. F0305022 | Rev. b | A3

No. of pages 1 | Page 1

Tolerance acc. to: EN 10243-1 F | Short circuit current: 50 kA 1s | Breaking load: 230 kN | Mass: approx. 1,8 kg