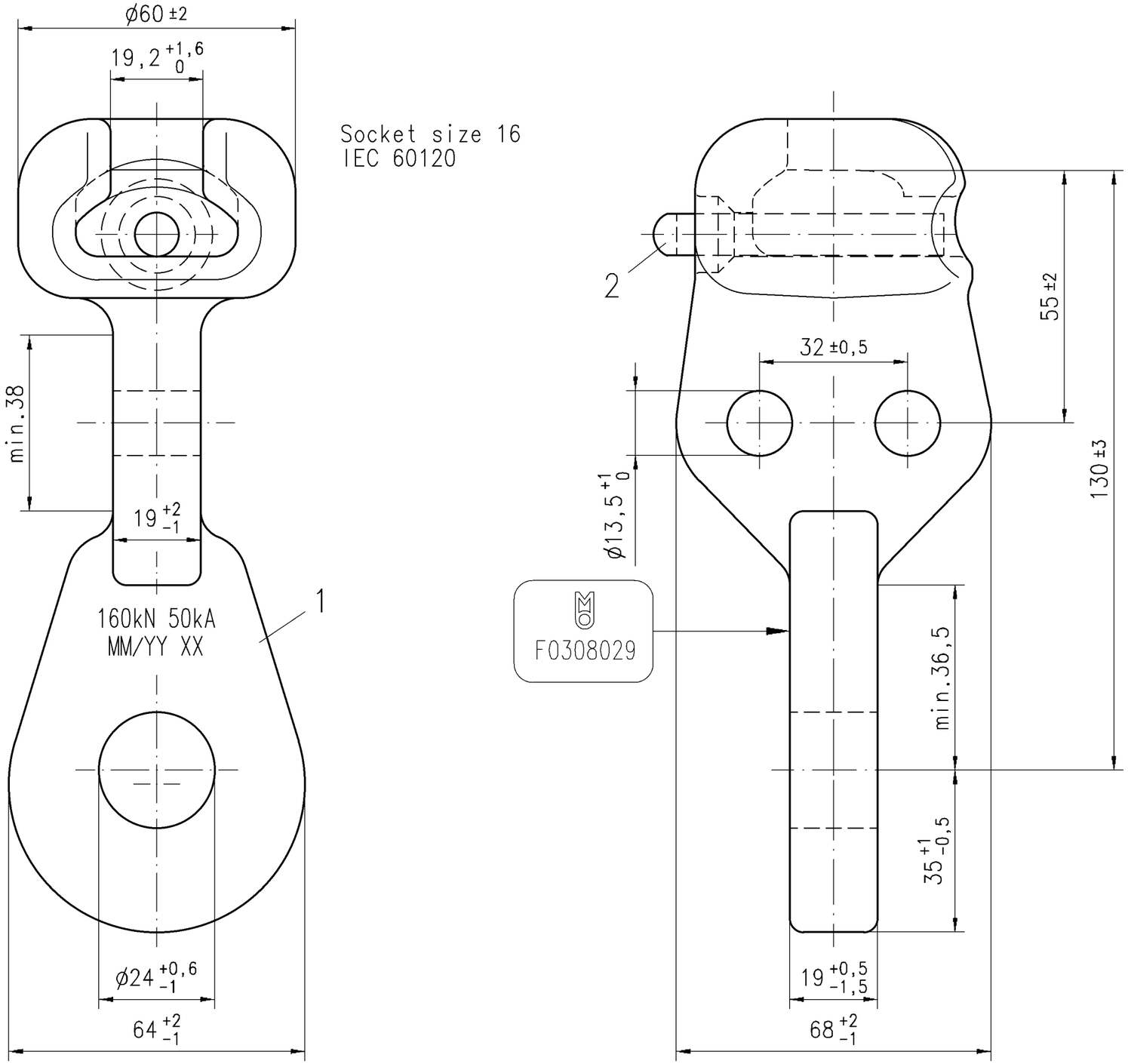

Ltm	Qty	Description	Standard	Drg. no.	Art. no.	Material	Surface	Mass [kg]
2	1	Splint pin VN 16 A	IEC 372	S0005006	1049.02/1	Steel	stainless	
1	1	Socket eye 16	IEC 60120	D0308029	ZR015.404	Cast iron	hot dip galv.	

2002	Date	Name
Drawn	30.09.	Peisel
Checked	14.10.	Zechner

MOSDORFER KNILL GRUPPE

Replace for
Replaced by
Art. No. 4220.301/4
Sim. to drg.-no. 135-333-076

Scale 1:1

Title
Socket eye twisted
IEC 16, t.c.p.f.

Drg. No. F0308029
Rev. c
Mod.
A3
No. of pages
Page

Tolerance acc. to: ISO 2768-vL | Short circuit current: 50 kA 1s | Breaking load: 160 kN | Mass: approx. 1,4 kg

Letter	Revision	Date	Name
c	Drg. update, 35+1/-0,5 added	13.04.2022	Schinnerl
b	Toleranzen geändert	27.02.2012	Schinnerl
a	Zng. überarb.; Supplier code added	22.04.2008	Wild W.

Number	Modification	Date	Name

This page and its indications is intellectual property of Mosdorfer Company and it isn't allowed to forward those information to a third party without the written assent of Mosdorfer company.