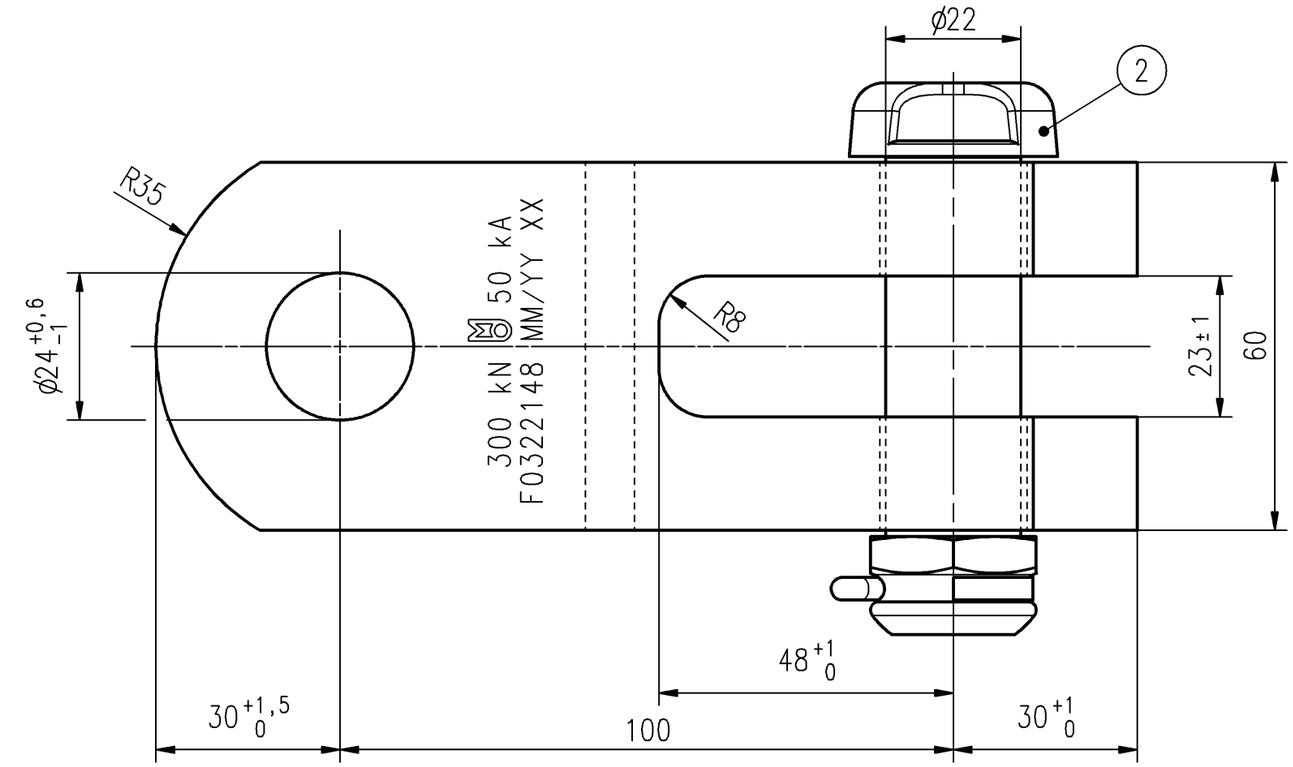

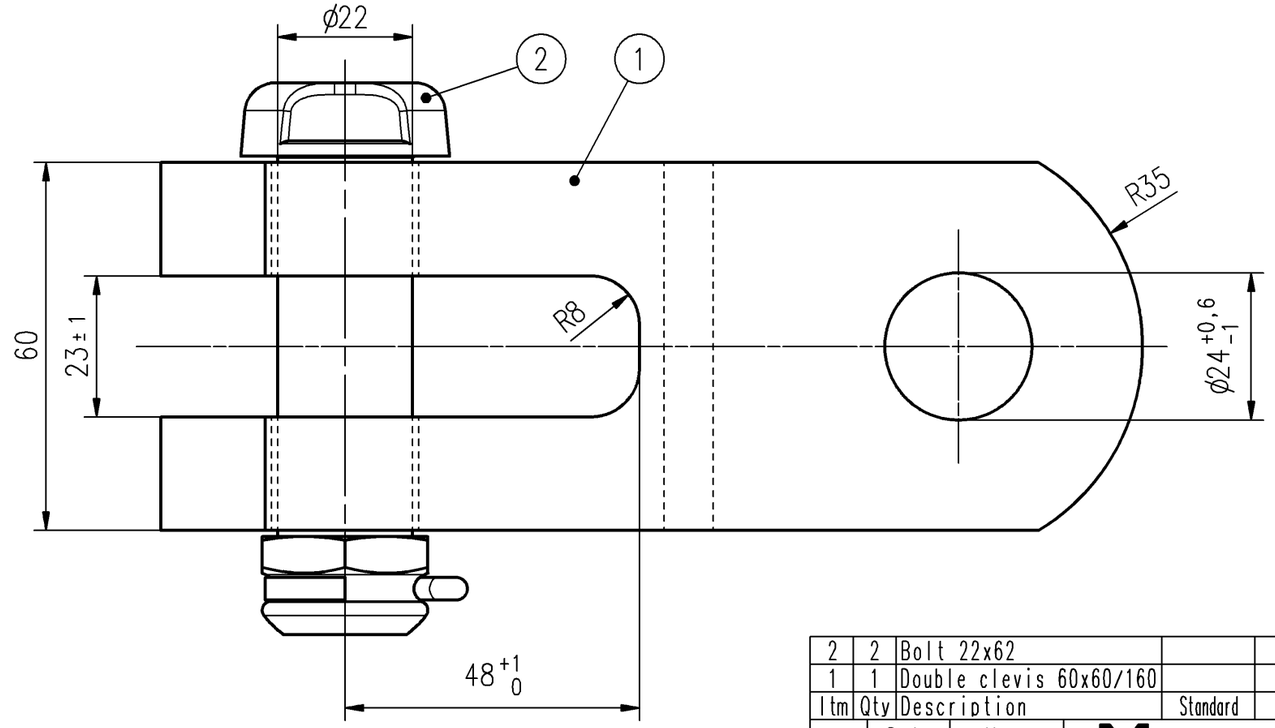

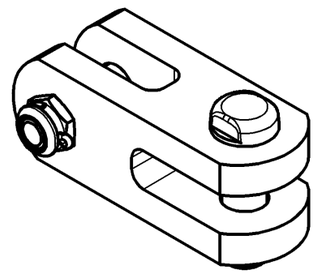

Tensile strength: 580-800 MPa

Ltm	Qty	Description	Standard	Drg.no.	Art.no.	Material	Surface	Mass (kg)
2	2	Bolt 22x62		S0001136	1046.33/0	8.8	hot dip galv.	
1	1	Double clevis 60x60/160				*) C 45 E + N	hot dip galv.	

	Date	Name
Drawn	13.06.2012	Gruber
Checked	13.06.2012	Grimm

MOSDORFER KNILL GRUPPE

Replace for | Sim. Drg. No.
Replaced by | F0322123
Art. No. 4115.0089

Scale 1:1

Title: Double clevis
100/B22/B22

Type | Drg. No. F0322148 | Rev. a | Mod. | A3

No. of pages 1 | Page 1

Tolerance acc. to: ISO 2768-vL | Short circuit current: 50 kA 1s | Breaking load: 300 kN | Mass: approx. 3.1 kg

Letter	Revision / Modification	Date	Drawn	Checked
a	R8 (R11,5), clevis depth 48+1/0	11.01.2021	ThoSch	DoBe

This page and its indications is intellectual property of Mosdorfer Company and it isn't allowed to forward those information to a third party without the written assent of Mosdorfer company.