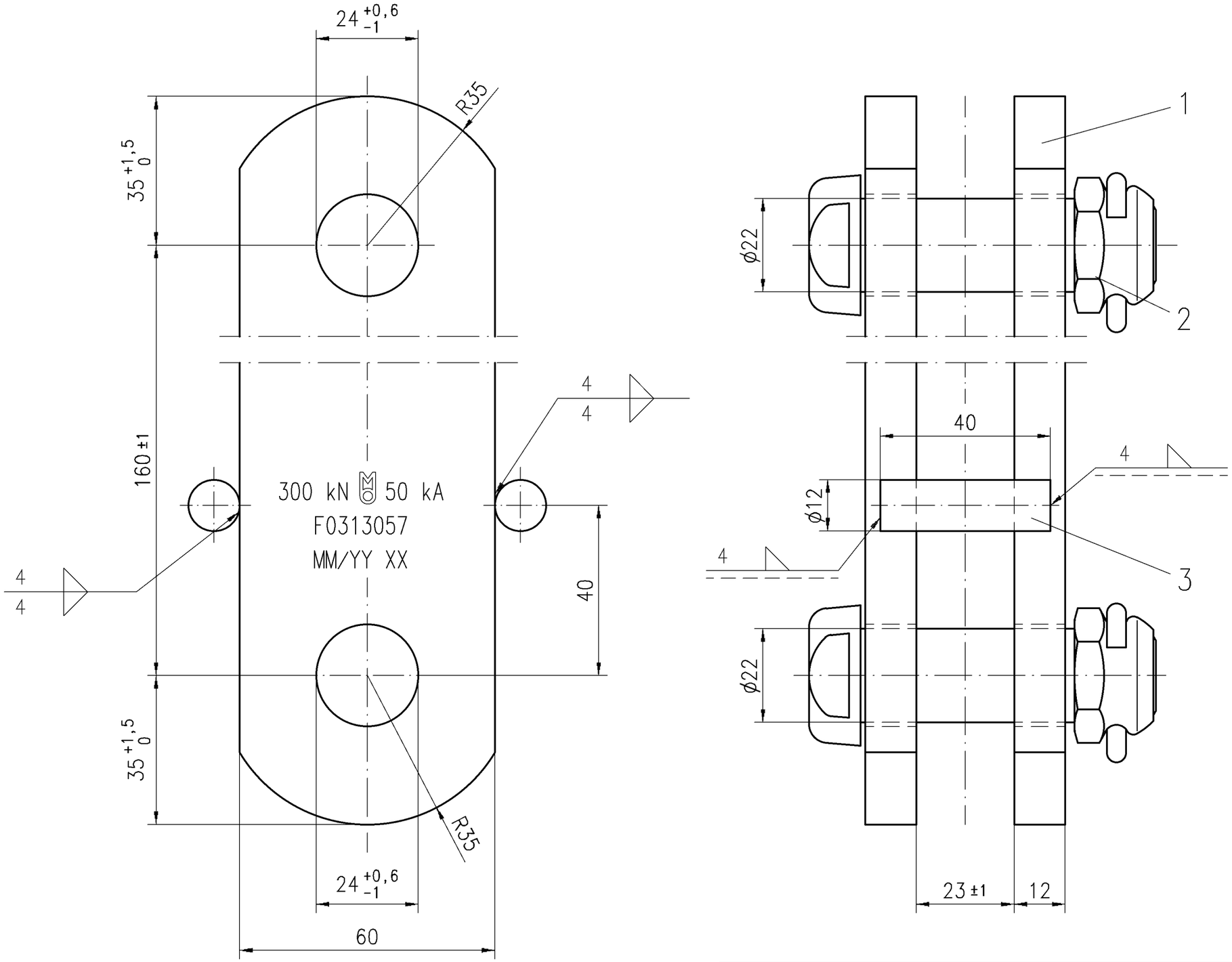

Itm	Qty	Description	Standard	Drg. no.	Art. no.	Material	Surface	Mass [kg]
3	2	round ø12x40				S235JRG2	hot dip galv.	
2	2	bolt S 22x48	DIN 48073		1046.24/0	8.8	hot dip galv.	
1	2	strap 60x12x230				S355J2	hot dip galv.	

	Date	Name
2003		
Drawn	19.11.	Kleinhappl
Checked	-II-	

MOSDORFER AUSTRIA

Replace for
Replaced by
Art. No. 4263.56/1

Sim. to drg.-no. F0313054 A3

Scale 1:1

Title
Double strap
60x12/160

Drg. No. F0313057

Rev. a | Mod. | A3

No. of pages | Page

Tolerance acc. to: ISO 2768 v | Short circuit current: 50 kA 1s | Breaking load: 300 kN | Mass: approx. 3,0 kg

Letter	Revision	Date	Name
a	S355J2 (S355J0); suppl. code added	21.07.09	Faul

Number	Modification	Date	Name

This page and its indications is intellectual property of Mosdorfer Company and it isn't allowed to forward those information to a third party without the written assent of Mosdorfer company.