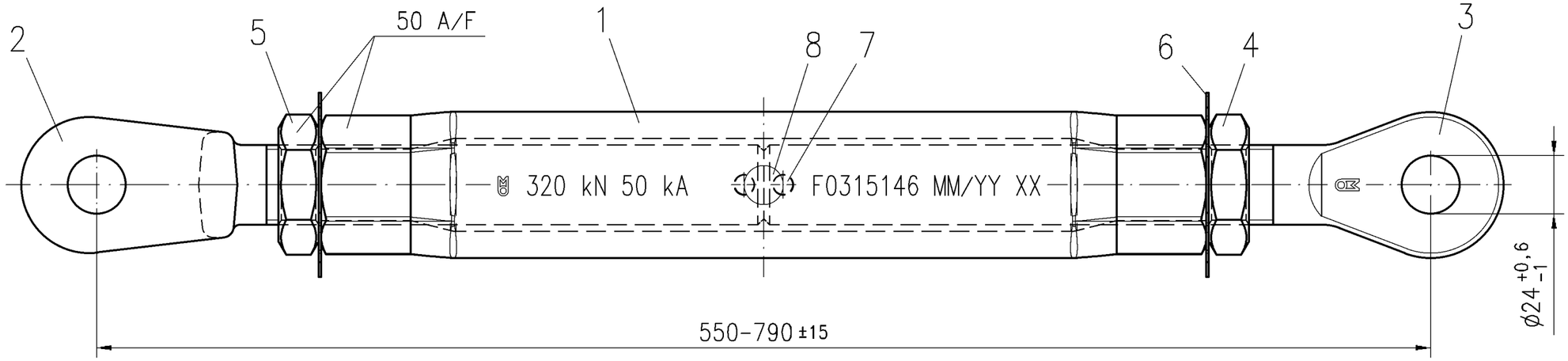

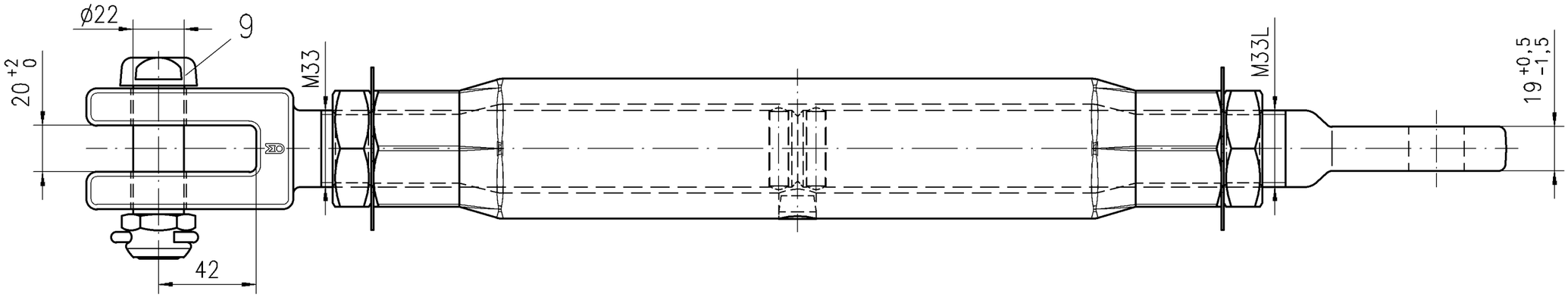

Itm	Qty	Description	Standard	Drg. no.	Art. no.	Material	Surface	Mass [kg]
9	1	Bolt 22x54		S0001136	1046.32/0	8.8	hot dip galv.	
8	1	Plug ø14		D0315007	ZV 100.100	Al-alloy		
7	2	Parallel pin ø8x32	DIN 6325		1050.42	Steel	mech.galv.	
6	2	Washer with tap f. M33			1067.04/5	Steel	stainless	
5	1	Hexagon nut B M33	DIN 439		1052.46	8	hot dip galv.	
4	1	Hexagon nut B M33L	DIN 439		1052.46L	8	hot dip galv.	
3	1	Eye bolt M33Lx275		D0315182	ZÖ 001.191L	Steel	hot dip galv.	
2	1	Clevis bolt M33x275		D0315181	ZG 010.097	Steel	hot dip galv.	
1	1	Turnbuckle nut M33x365		D0315114	ZS 095.091/2	Steel	hot dip galv.	

2011	Date	Name
Drawn	12.08.	Gruber
Checked	12.08.	Zechner

MOSDORFER KNILL GRUPPE

Replace for
Replaced by
Art. No. 4268.05/4/1
Sim. to drg.-no. F0315097

Scale 1:2

Title
Turnbuckle M33
Clevis-Eye, 550-790 mm

Drg. No. F0315146
Rev. a
Mod.
A3
No. of pages
Page

Tolerance acc. to: ISO 2768-vL | Short circuit current: 50 kA 1s | Breaking load: 320 kN | Mass: approx. 9,2 kg

Letter	Revision	Date	Name
a	Drawing revised	14.07.2020	Berger

Number	Modification	Date	Name

This page and its indications is intellectual property of Mosdorfer Company and it isn't allowed to forward those information to a third party without the written assent of Mosdorfer company.