Product name	Upper arcing horn single Upper arcing horn single
Product code	0626581
Product type	4726.150
GTIN	7332811063800
ETIM-Class	

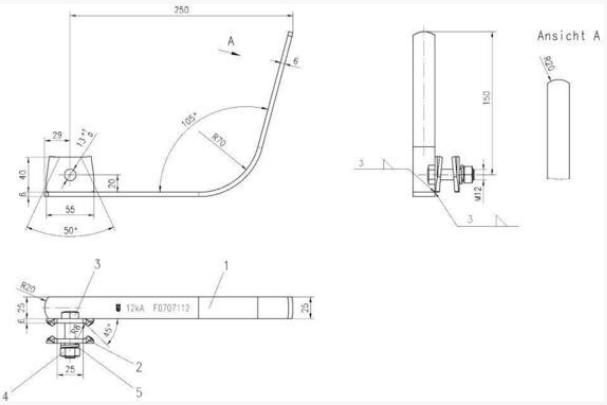

Measurements

Length	270 mm
Height	50 mm
Width	70 mm
Weight	600 g

Technical Specifications - String Hardware

Application	for hänkjedja i vinkel

String Hardware - Electrical Specifications

Short Circuit Current kA 1s	12 kA
Voltage	72.5 kV